SERIES 900 STAINLESS STEEL PENSTOCKS

HAMBAKER FlowControl

STSTPENSTOCKS

HAMBAKER FlowControl

Business Philosophy

- Integrity in management
- Quality of product

HISTORY

HAM BAKER is a name most professionals in the water and wastewater industries will instinctively associate with high quality precision-engineered products. Established over 100 years ago the original company has undergone many changes over the last century and more recently changes of ownership.

The company is acknowledged as the world's leading designer and manufacturer of penstocks and flap valves. Penstocks and other flow control products manufactured by Ham Baker can be found operating in almost every country in the world.

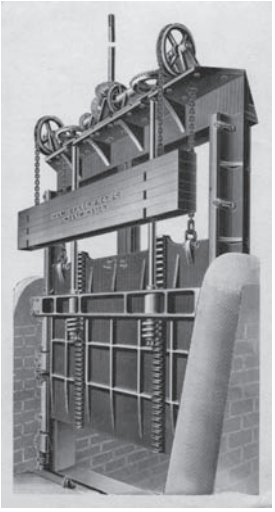

The history of the company began in 1884 as a partnership between Frederick Ham, William Baker and Claude Sansom in London and began manufacturing penstocks in 1886, trading under the name of Ham Baker & Company Ltd. In 1902, Hartleys (Stoke-on-Trent) Ltd was founded as a family owned business in Stoke-on-Trent by William Hartley, who gained his early engineering training in the locomotive industry. Initially the company manufactured general engineering items and began specialising in the manufacture of equipment for the water and wastewater industries in 1904.

The two companies merged in 1998 to create a product range unrivalled throughout the world.

In 2002 the company was acquired by the WTB Group of Bristol and continues its proud 100 year history as a leading innovator in the fields of water and wastewater engineering.

The company now produces a range of products in cast iron, ductile iron, stainless steel and plastic to deal with every aspect of fluid control.

15 Reasons
Why customers choose Ham Baker

1. Reputation
We hold an esteemed reputation globally, for well engineered, high quality equipment.

2. Service
Unsurpassed in service, our team of professionals will help you to find the most effective solution. All our personnel have e-mail contactability, even whilst away from the office. The business world is moving faster exponentially, and we aim always, to move with it.

3. People
We pride ourselves on building long-term, strong relationships with both suppliers and customers to enable us to better understand and meet customer needs.

4. Range
Unique size range with manufacturing capability up to 5m square penstocks.

5. Quality
Our products exceed the requirements of British and American Waterworks Association Standards and, indeed, exceed the quality of most of our competitors. All products are manufactured under a BS EN ISO 9001:2000 certified quality assurance system.

6. Delivery
No other company delivers any faster than us. Spares and Fastrack products are often delivered within hours.

7. Flexibility
One of the very few companies who cater for non-standard requirements. "You draw it... we'll build it".

8. Partnerships: Experienced in Framework Arrangements
We have worked with and continue to work with a number of Water and Sewage Companies in the UK who are committed to value for money when using Ham Baker. A sign of value for money and peace of mind.

9. One Stop Shop
Recognised as the only 'one-stop shop' in penstocks. Design, proposals, specification, supply, fix, repair, spares, aftercare, consultation. Why diverse your time, or multiply the risks with several suppliers, when you can have all the contacts under one roof?

10. Peace of Mind
Readily available library of technical information, built up over 100 years, gives you peace of mind regarding design and maintenance. We have penstocks still in practical working order after over 90 years of continuous service.

11. Brand Name
Ham Baker is a household name of stability, in the water treatment business. Most of our competition is unknown to the end user.

12. Continued Innovation
We are at the leading edge of design and development.

13. Unique
Coplastix Penstocks are the most cost effective penstocks available. Designed and built only by Ham Baker. More cost effective (i.e. lower cost of ownership) than stainless steel or cast iron.

14. Retro Engineering
Designs are on file from over 60 years, to enable parts to be re-engineered, to service older penstocks, meaning lower cost of manufacture, with exact specification.

15. Price
Our products are competitively priced and represent excellent over life-time value for money, when considering all aspects of ownership; cost, installation, maintenance, and long-term performance.

Stainless Steel Penstocks

Series 900 Stainless Steel Penstocks

Series 900 Stainless Steel Penstocks offer high performance and long life in designs which accommodate a wide range of mounting arrangements and flow conditions. Rugged, reinforced stainless steel construction is combined with tough, flexible ultra high molecular weight polyethylene (UHMWPE) seals, to provide a heavy-duty assembly. Flush bottom closure is provided by a resilient bottom seal. In addition to the wide range of standard penstocks, Ham Baker can quickly and economically produce penstocks customized for unusual applications.

1

Advantages

Superior Performance:
Ham Baker guarantees lower leakage than that listed in BS7775 with a guaranteed leakage of no more than 0.4L. per minute, per metre of seal perimetre in on seating head and off seating head conditions, including high head service.

Durability:
The ultra violet stabilized UHMW seals that are utilised on our stainless steel penstocks are field proven to maintain shape and integrity in demanding application. Ham Baker tested the UHMW seals to confirm the ability to withstand continuous operation in an abrasive environment. The testing consisted of 5,000 open/close cycles in an abrasive media and resulted in minimum wear. (Test results available upon request.)

Self-Adjusting Seals:
The Series 900 stainless steel penstocks have a self-adjusting seal system that completely eliminates the need for field adjustment. The self-adjusting seal system is a combination of durable UHMW seat/seals and a resilient static spring/seal. The UHMW seals are shaped to form a low friction, yet tight, seal with the door. The spring seal serves two main purposes: First; it acts as a bulb seal between the frame and the UHMW seals, and secondly; it acts as a “spring” to ensure continuous contact between the UHMW seals and the door. The spring/seal is stationary, similar to an O-ring seal, and it is protected from wear of damage from the movable door by the UHMW seals.

Ease of Repair:
In the unusual event that the seals are damaged, they can be replaced in the field with common tools. The penstock does not have to be removed from the wall.

Range of Sizes:
The process to design and manufacture fabricated penstocks allows for a nearly unlimited range of sizes.

Mounting Configurations:
Frames can be supplied suitable for mounting in any of the following –
Channel rebates, channel sidewall, wall face or any combination of these.

OPTIONAL FEATURES

Penstock size and service conditions determine the penstock configuration required for each application. Overall penstock widths, side frame sections and invert sections shown in this literature illustrate only a few of the many configurations available.

Weir (Downward Opening)
Most penstock models can be specified for downward opening service. Such penstocks are used where there is insufficient clearance to open an upward opening penstock or where the penstock is to be used as an overflow weir. Penstocks may be furnished with or without a top seal.

Non-Rising Spindles:
All models may be specified with non-rising spindles. This operating spindle arrangement is normally selected for installations with low headroom.

PENSTOCK SELECTION CRITERIA

Penstock Size:
In water and wastewater treatment plants, penstocks are most often sized to fit a pre-designed structure. In this regard Series 900 stainless steel penstocks offer great flexibility to accommodate any aperture.

Penstock Mounting:
Series 900 penstock frames may be embedded it the channel walls, mounted on the face of wall or on the inside of an existing channel.

Penstock Material:
Series 900 penstocks are typically constructed of either type 304 or type 316 stainless steel. Stainless Steel BSEN 10088 grade 1.4301(304) is less expensive and generally it may safely be specified for water or waste water applications if residual chlorine is 200mg/1 or less. Stainless Steel BSEN 10088 grade 1.4401 (316) is a more conservative choice and provides greater resistance to pitting and crevice corrosion. In either case, the low carbon (“L”) grade should be used for welded parts to reduce carbon precipitation in the welds. Different alloys are also available. Please consult Ham Baker.

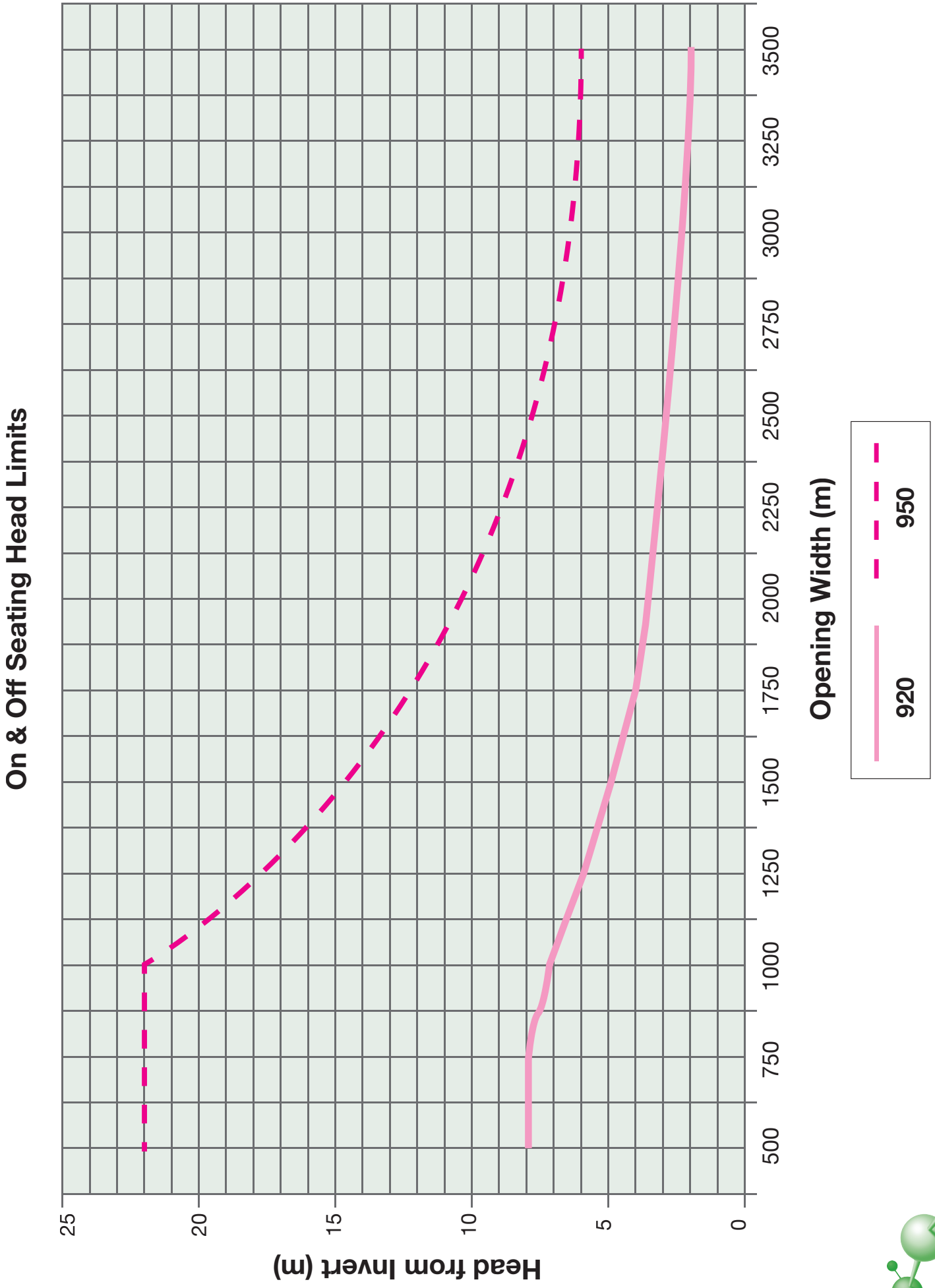
On & Off Seating Head Limits
Head from Invert (m)
25
20
15
10
5
0
500
750
1000
1250
1500
1750
2000
2250
2500
2750
3000
3250
3500
Opening Width (m)
920
950

2

Series 920
Channel Rebate Mounted

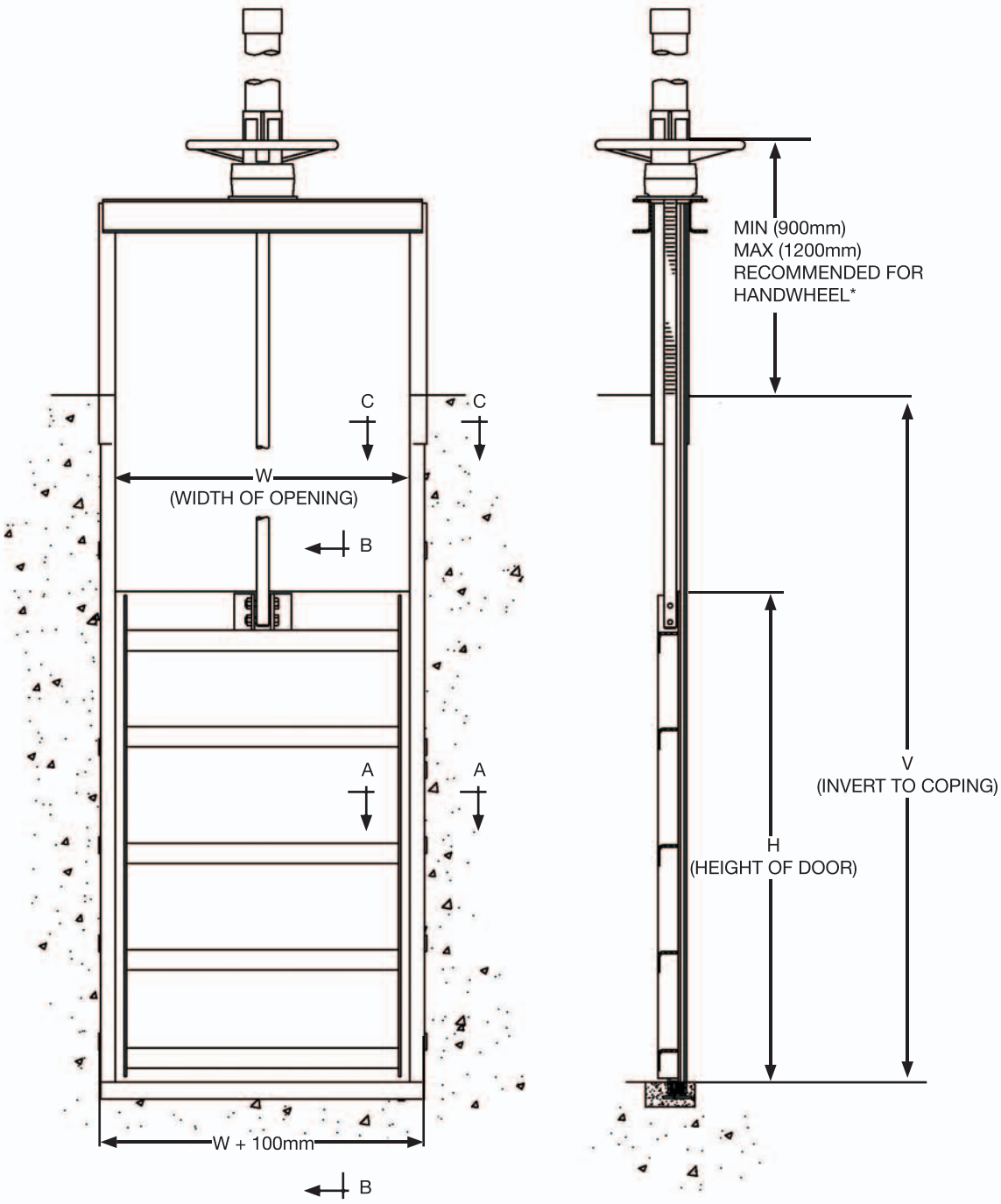

* SEE OPERATOR SECTION FOR OTHER ARRANGEMENTS

Series 920

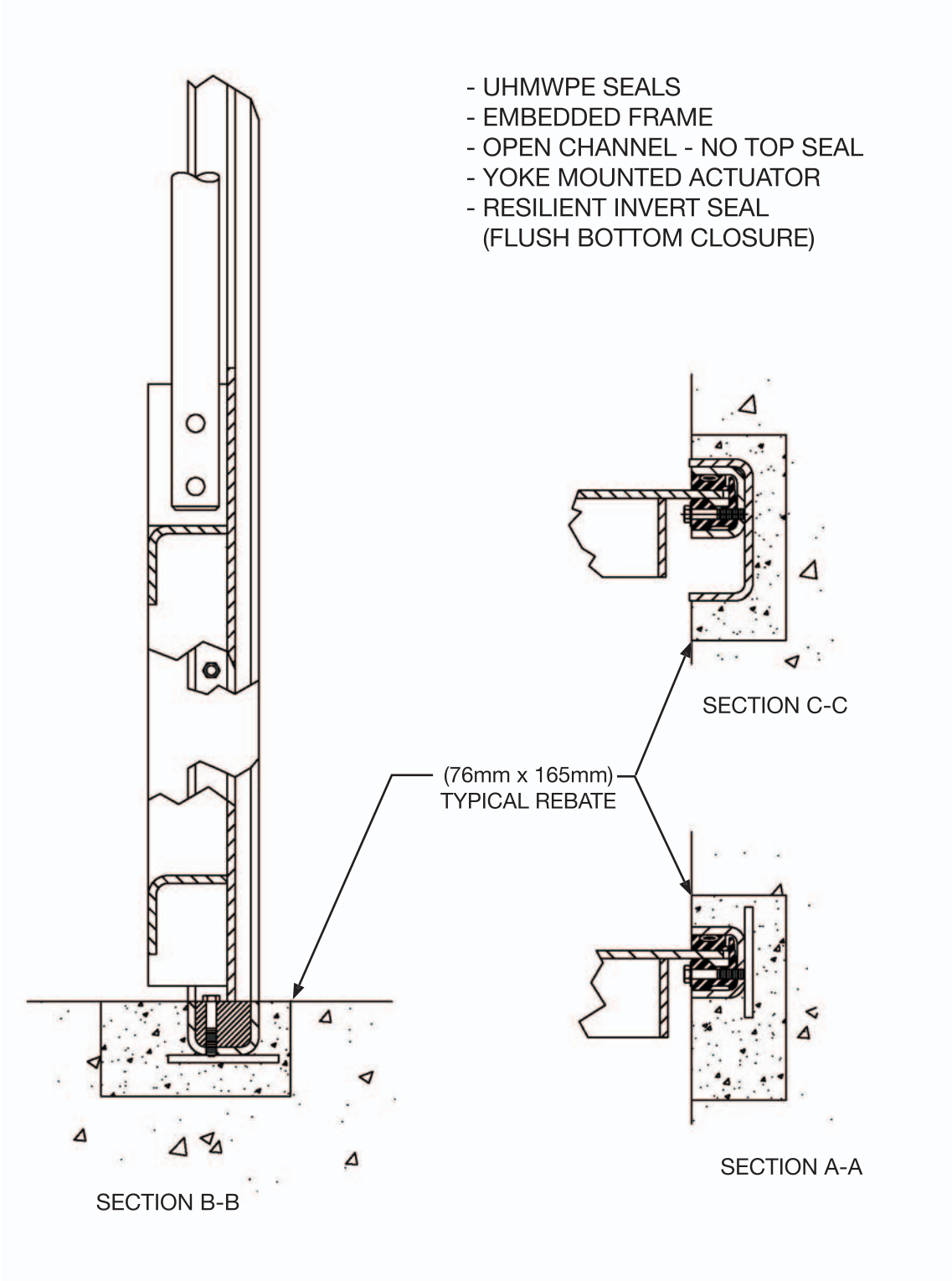
- UHMWPE SEALS
- EMBEDDED FRAME
- OPEN CHANNEL - NO TOP SEAL
- YOKE MOUNTED ACTUATOR
- RESILIENT INVERT SEAL
(FLUSH BOTTOM CLOSURE)
SECTION C-C
(76mm x 165mm)
TYPICAL REBATE
SECTION A-A
SECTION B-B

Series 920
Wall Face Mounted Closed Top

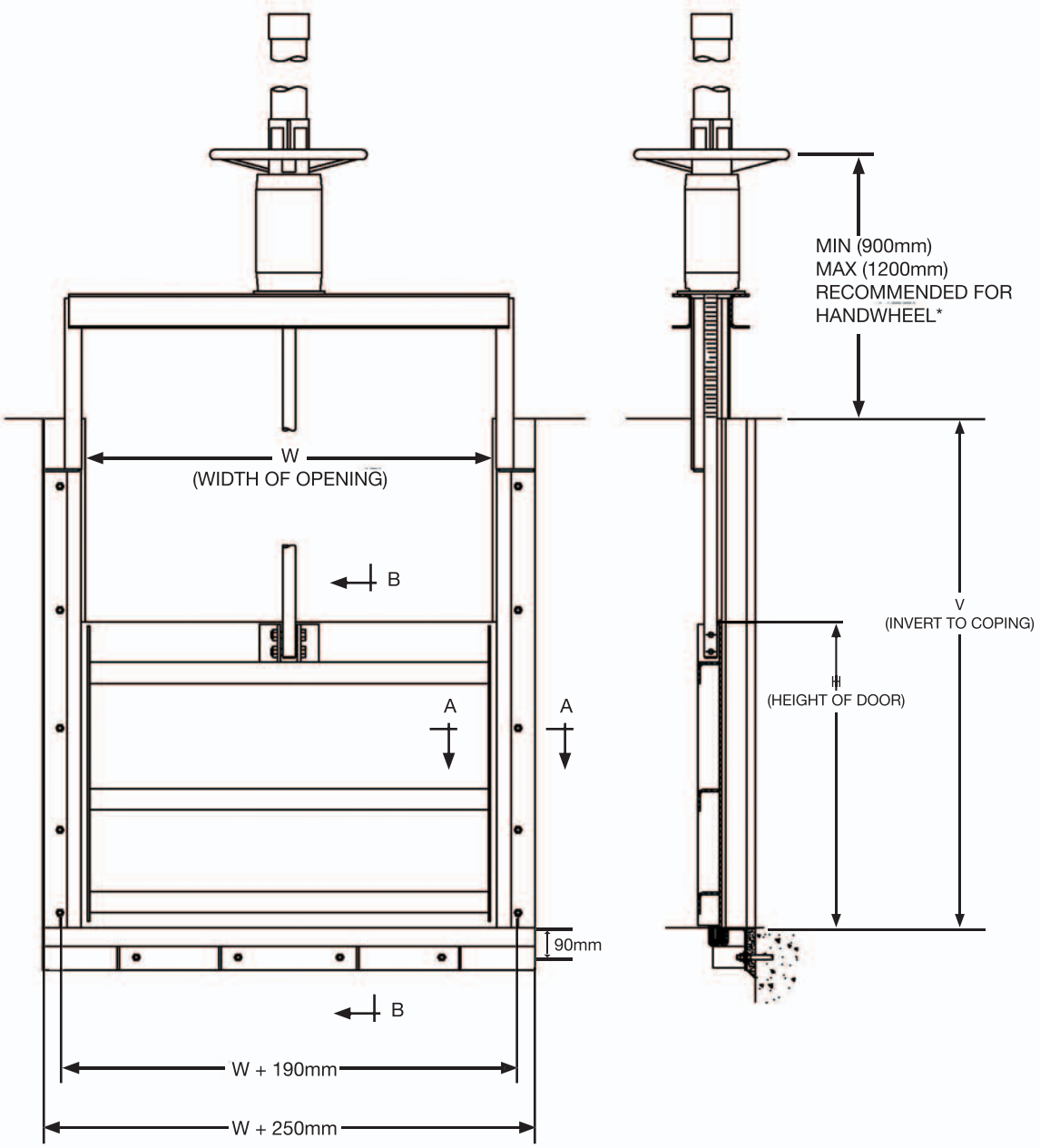

* SEE OPERATOR SECTION FOR OTHER ARRANGEMENTS

Series 920
Wall Face Mounted Open Top

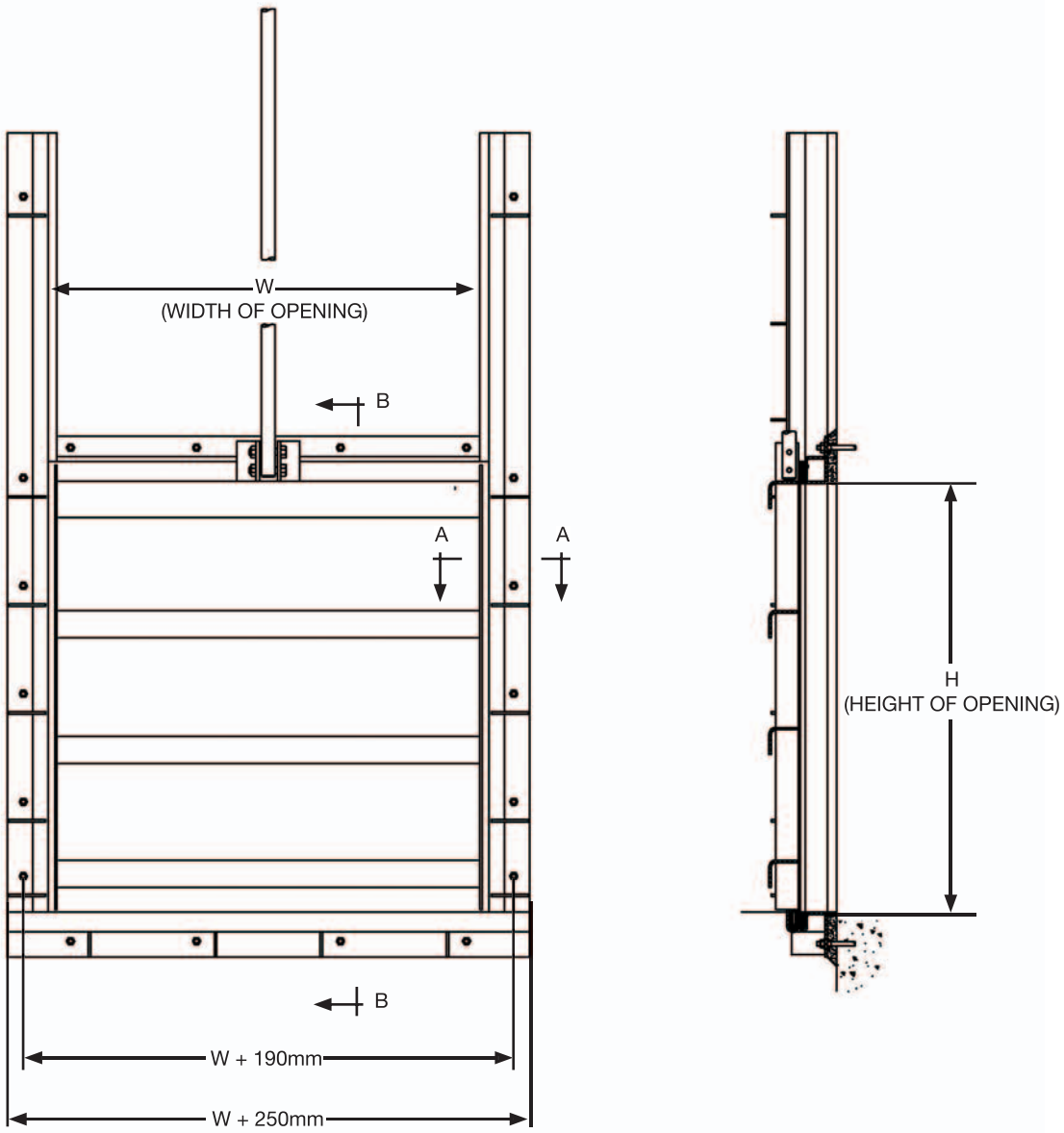

SEE OPERATOR SECTION FOR OPERATING OPTIONS

Series 920

- UHMWPE SEALS
- WALL MOUNTED FRAME
- OPEN CHANNEL - NO TOP SEAL
- YOKE MOUNTED ACTUATOR
- RESILIENT, FLUSH INVERT SEAL

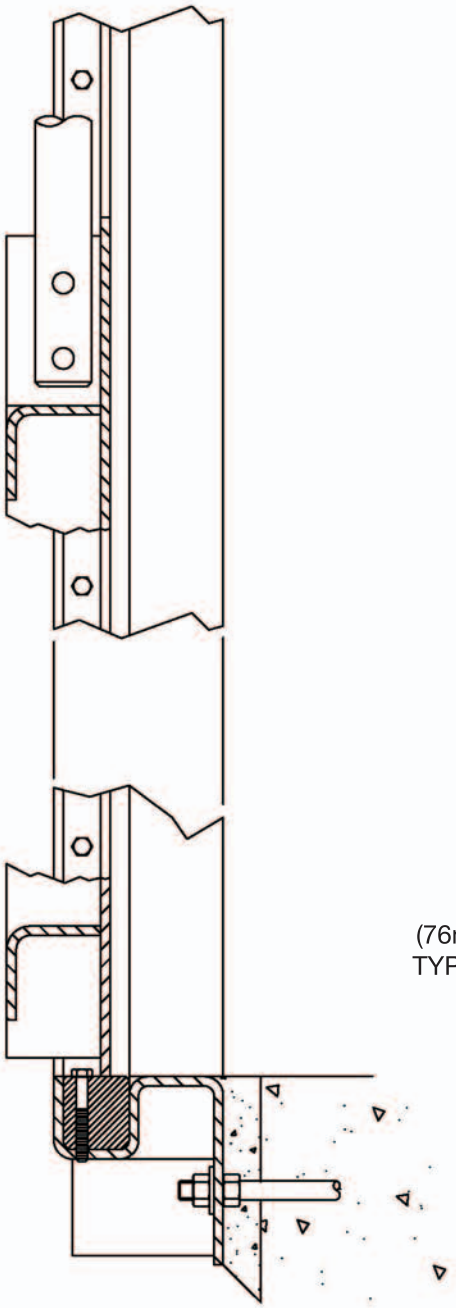

SECTION B-B

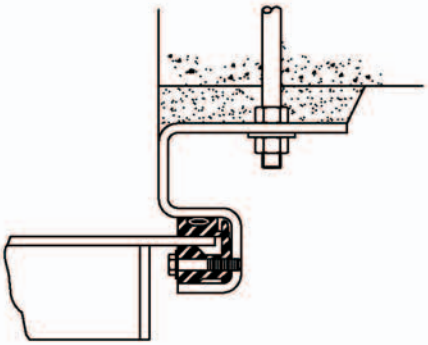

GUIDE SECTION A-A

(76mm x 170mm)
TYPICAL REBATE

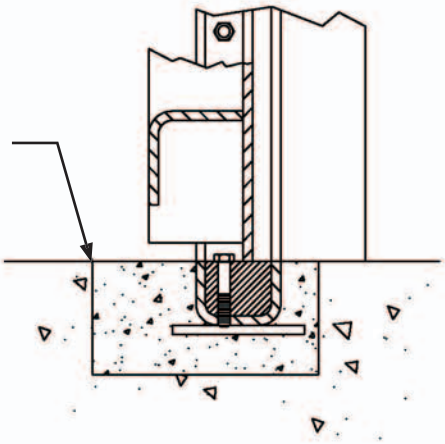

SECTION B-B
OPTIONAL REBATED INVERT

Series 920
Channel Side Wall Mounted

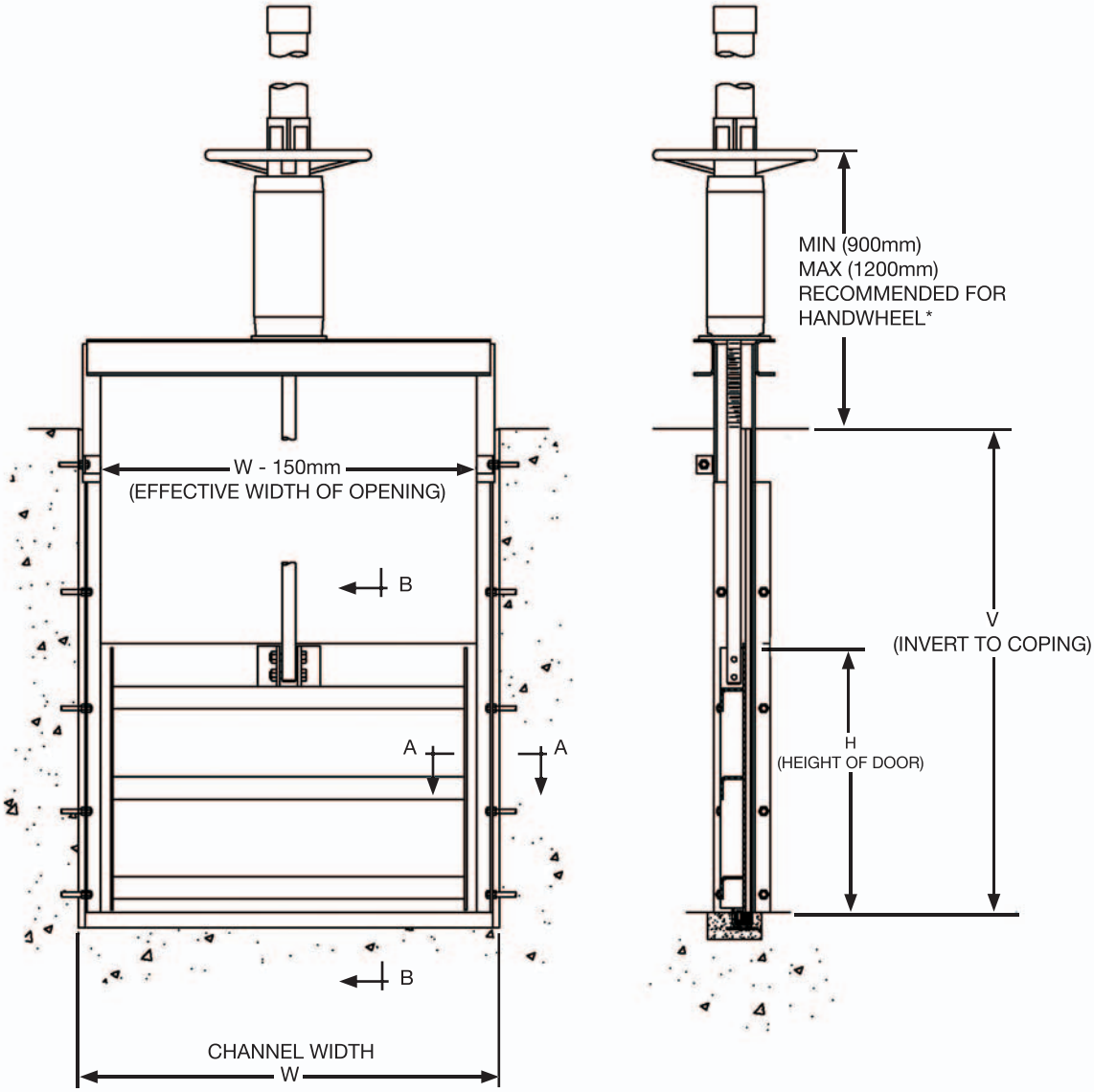

Series 920

- UHMWPE SEALS
- FRAME MOUNTS IN EXISTING CHANNEL
- OPEN CHANNEL - NO TOP SEAL
- YOKE MOUNTED ACTUATOR
- RESILIENT, FLUSH INVERT SEAL

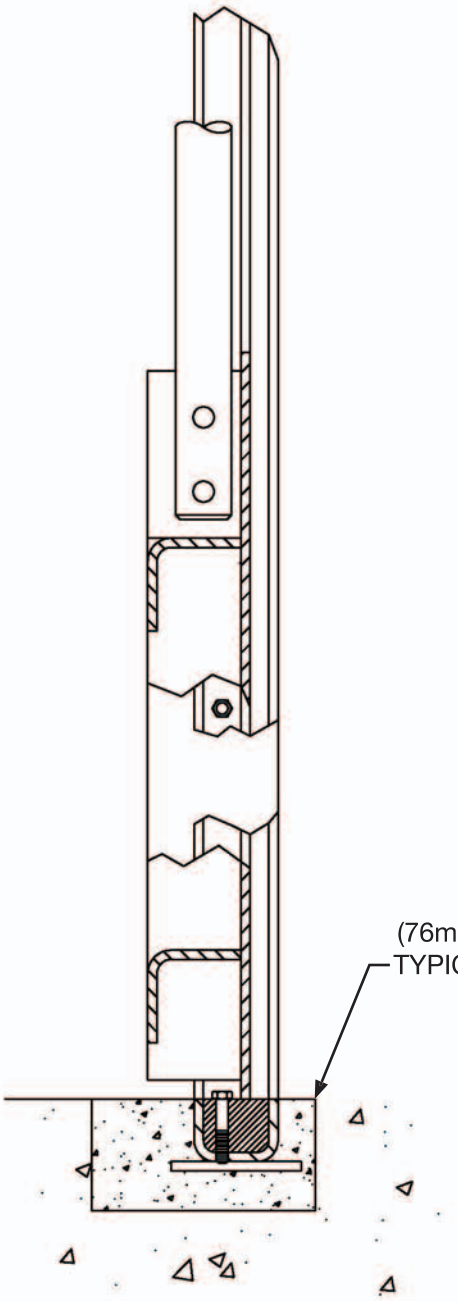

SECTION B-B

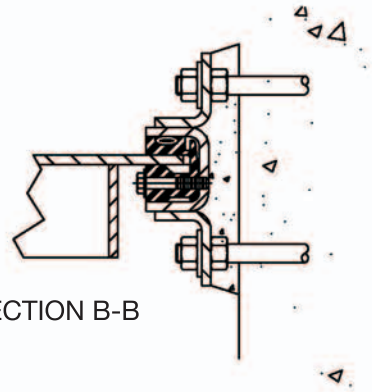

SECTION B-B

GUIDE SECTION A-A

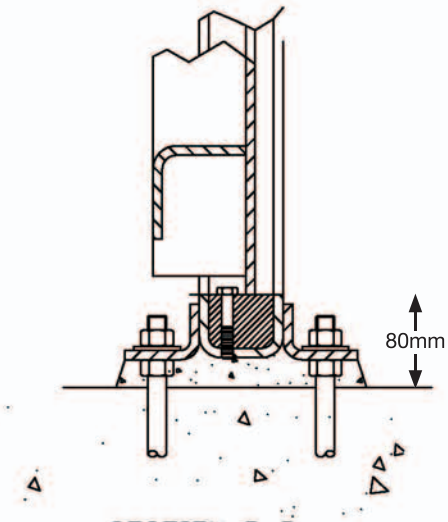

SECTION B-B
OPTIONAL SURFACE MOUNTED INVERT

Series 920
Weir Penstock

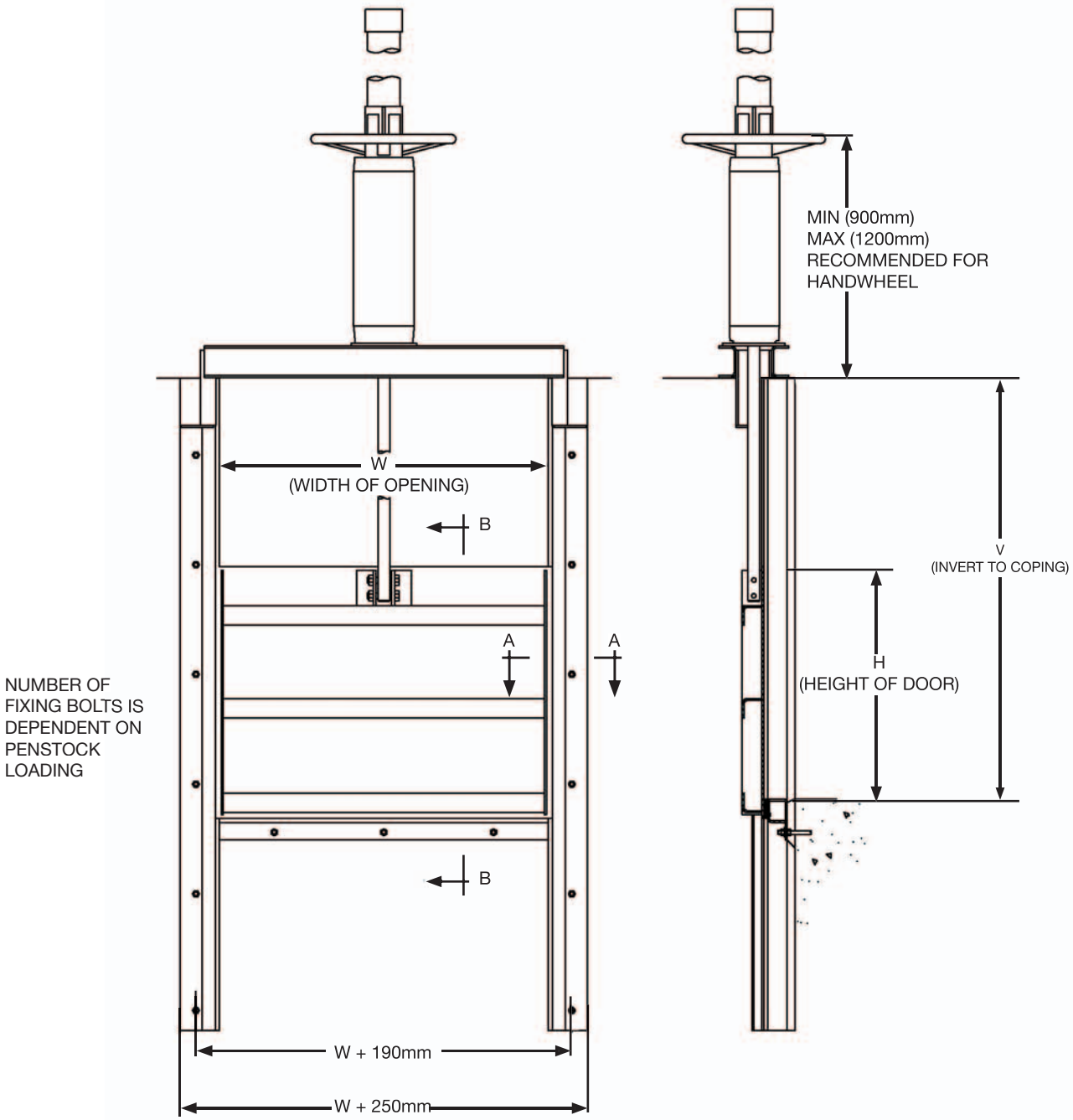

Series 920
Weir Penstock

- UHMWPE SEALS
- WALL MOUNTED FRAME
- DOWNWARD OPENING
- OPEN CHANNEL - NO TOP SEAL
- YOKE MOUNTED ACTUATOR
- RESILIENT, INVERT SEAL

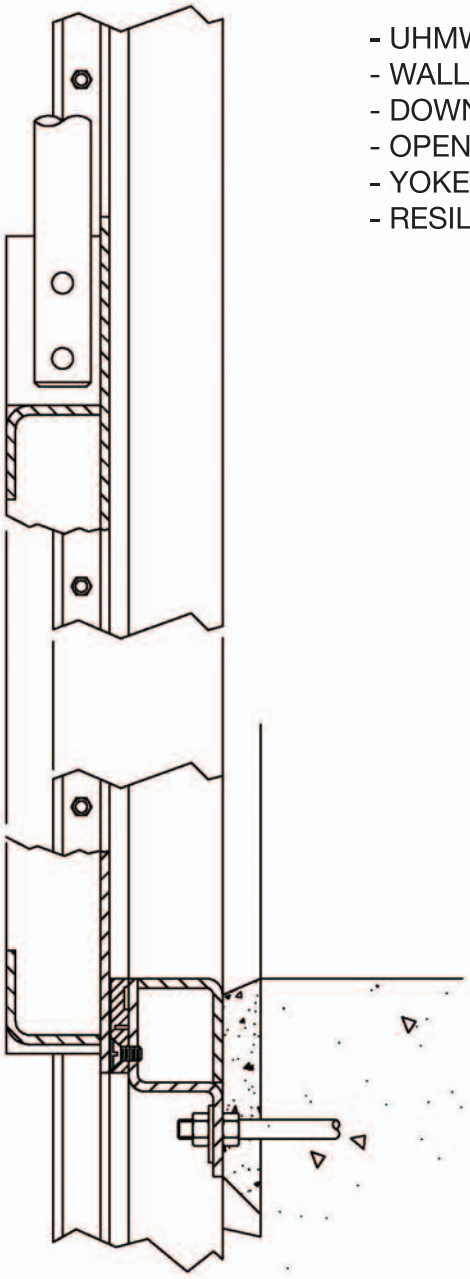

SECTION B-B

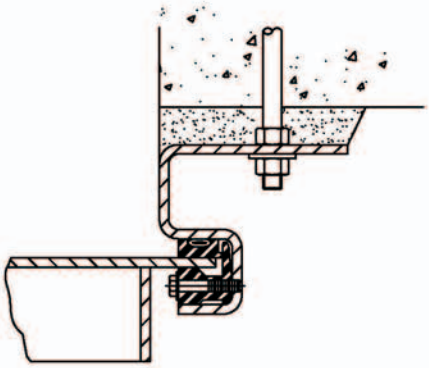

GUIDE SECTION A-A

3

Series 950
Wall Face Mounted Closed Top

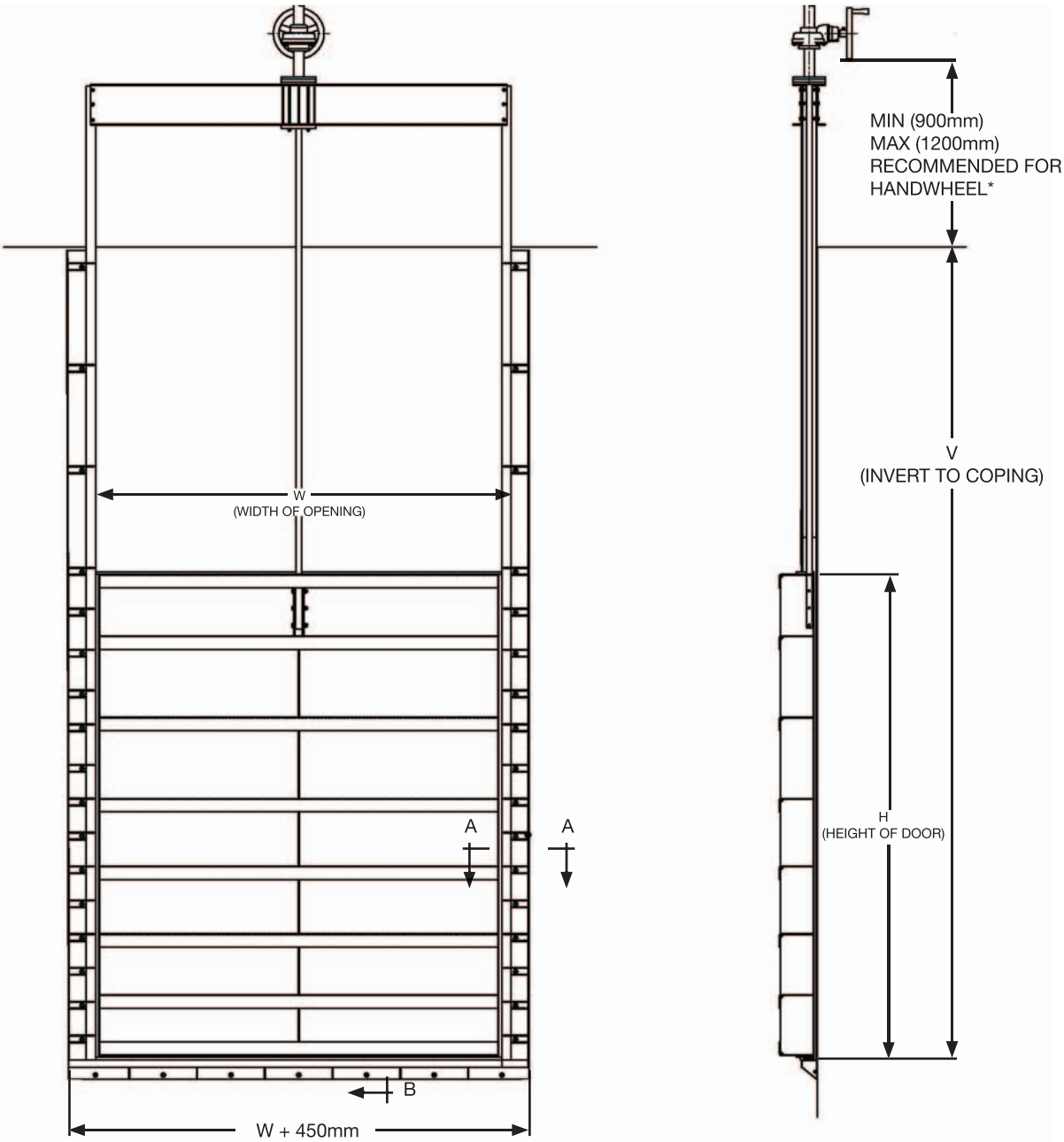

SEE OPERATOR SECTION FOR OTHER OPERATING ARRANGEMENTS

Series 950
Wall Face Mounted Open Top

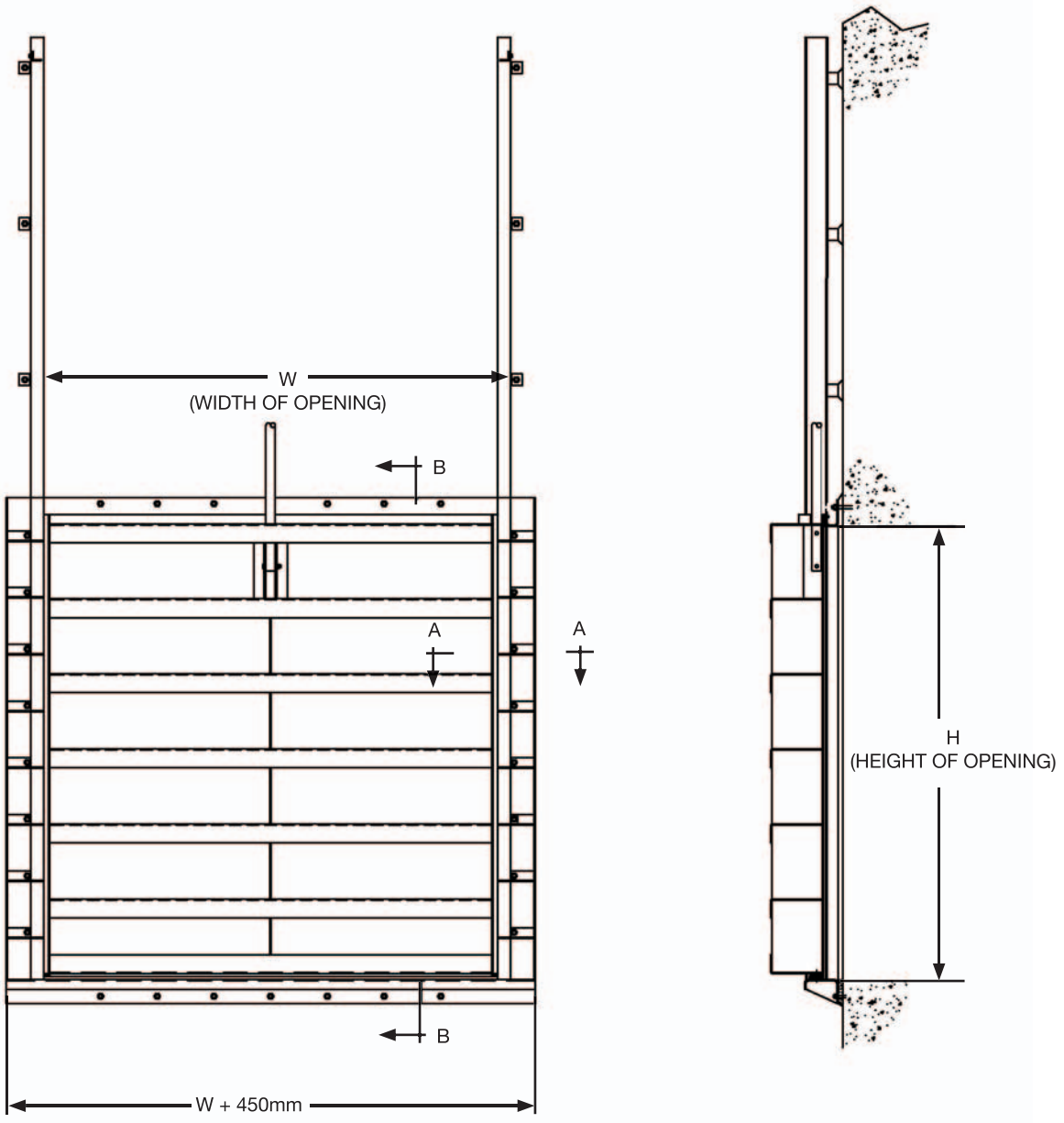

SEE OPERATOR SECTION FOR OTHER OPERATING ARRANGEMENTS

Series 950
Wall Face Mounted

- UHMWPE SEALS
- WALL MOUNTED FRAME
- OPEN CHANNEL - NO TOP SEAL
- YOKE MOUNTED ACTUATOR
- RESILIENT FLUSH INVERT SEAL

SECTION A-A

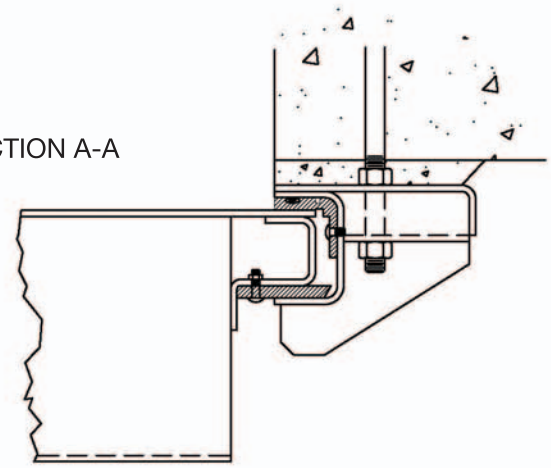

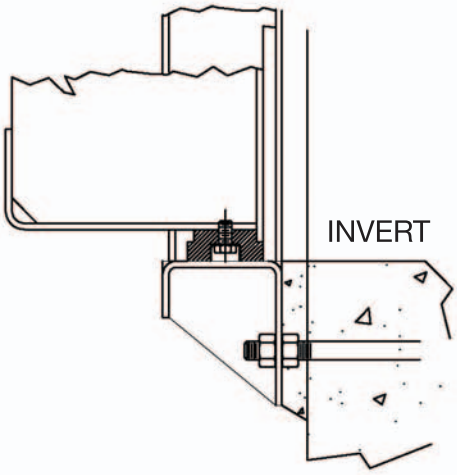

SECTION B-B

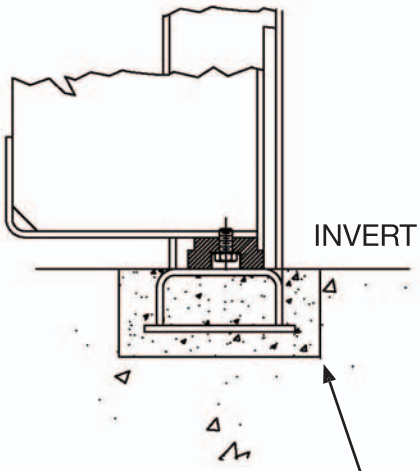

REBATE 90mm x 200mm
OPTIONAL EMBEDDED INVERT

Series 950
Channel Sidewall Mounted

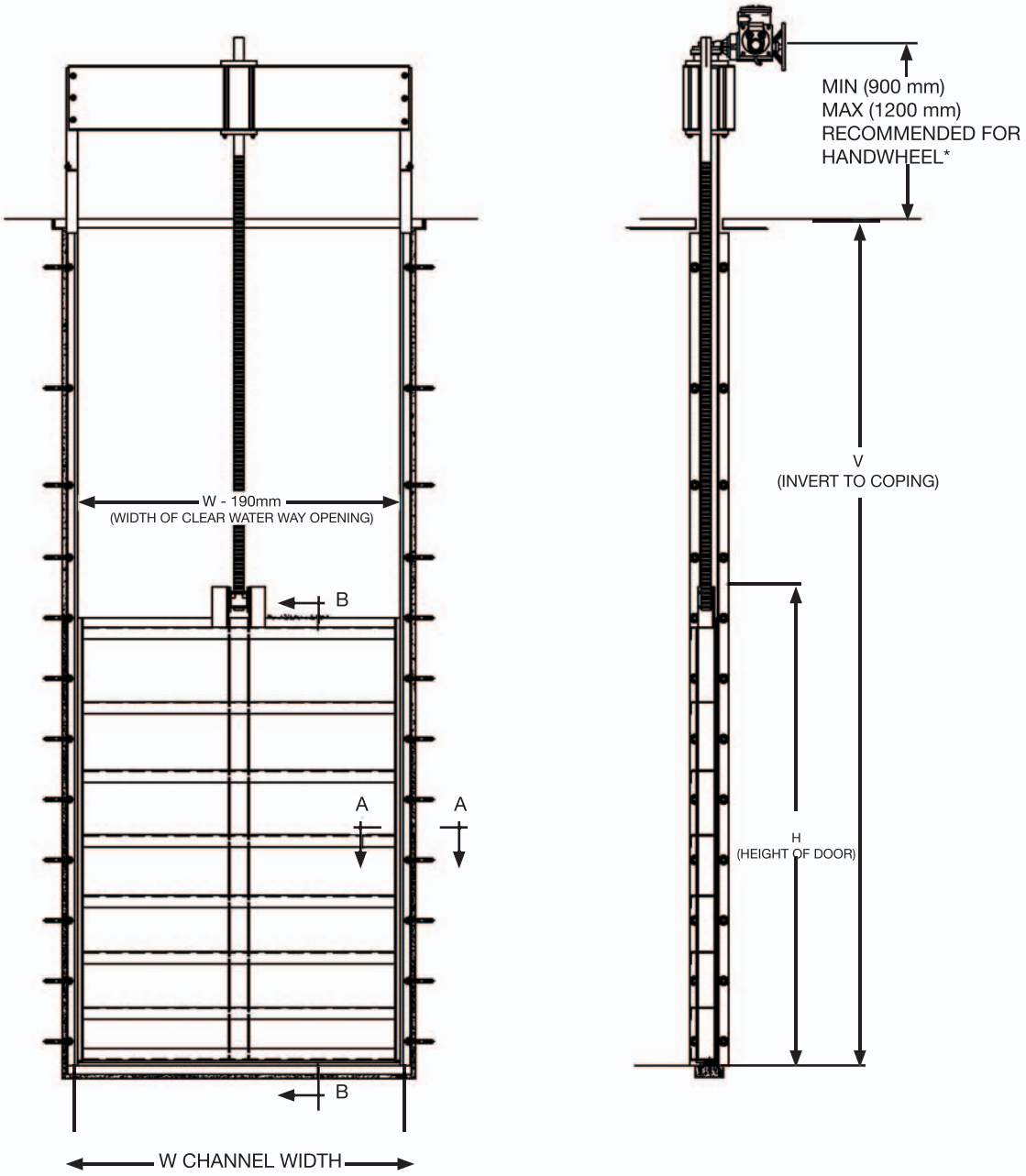

SEE OPERATOR SECTION FOR OTHER OPERATING ARRANGEMENTS

Series 950

- UHMWPE SEALS
- FRAME MOUNTS IN EXISTING CHANNEL
- OPEN CHANNEL - NO TOP SEAL
- YOKE MOUNTED ACTUATOR
- RESILIENT FLUSH INVERT SEAL

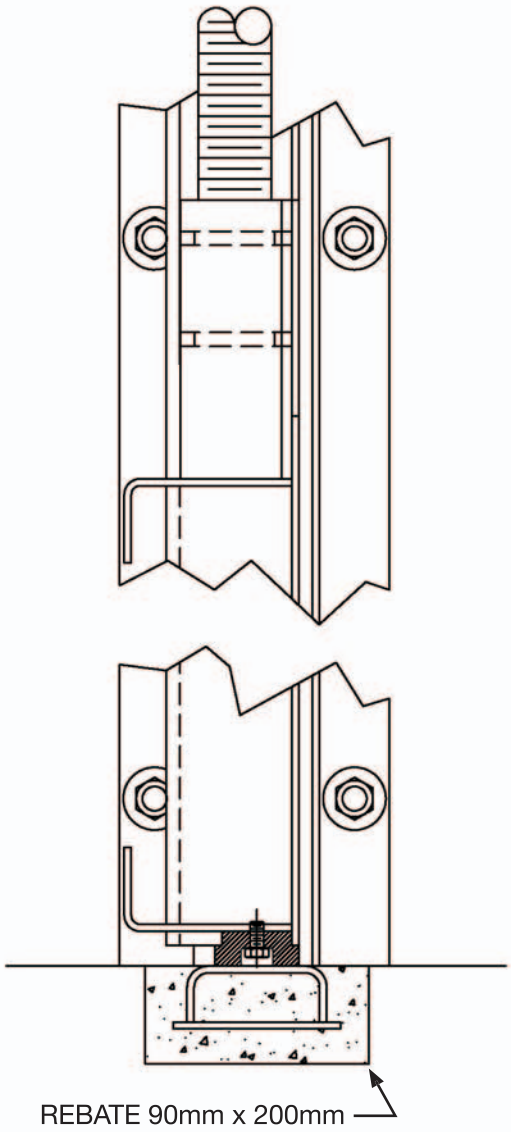

SECTION B-B

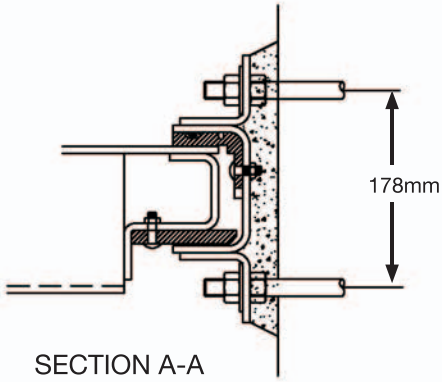

SECTION A-A

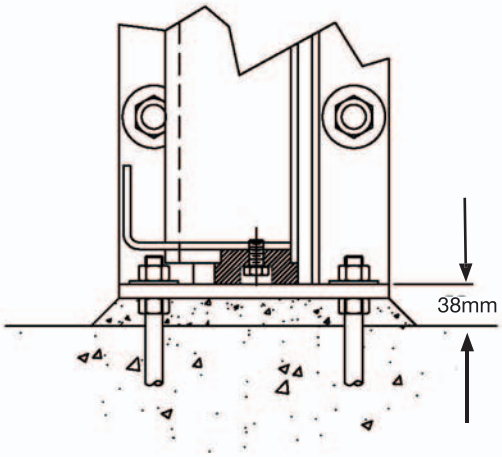

SECTION B-B

OPTIONAL SURFACE MOUNTED INVERT MEMBER

4

Technical Details

SIZES

BS7775 'Specification for Penstocks' provides useful information regarding sizes for penstocks.

Penstocks are suitable for three shapes of aperture
- Square
- Rectangular
- Circular

Standard Rectangular Penstocks have an aspect ratio (width divided by depth) between 0.5 and 2.Penstocks outside this range can be considered but will be special designs.

Cast Iron Circular Penstocks below 600mm to 1000mm in diametre, depending on type, have a circular sealing face. For all other circular penstocks the sealing face is as a square penstock.

FLOW CHARACTERISTICS

1. General

Penstocks are installed in civil engineering structures. When a penstock is fully open, the head loss attributable to the penstock alone is generally quite small compared to the losses due to the civil engineering structure. An exception to this is a channel mounted penstock where the top water level is above the top of the door opening.

2. Discharge through an orifice

This type of flow occurs where a penstock controls flow into or out of a tank or other large container. If the penstock is fully submerged, the flow through an open or partially open penstock and its associated civil engineering structure opening will be given by

$$q = CA\sqrt{(2gH)}$$

Where

q is the discharge rate - cubic metres per second

C is a discharge coefficient generally taken to be 0.7

A is the aperture area - square metres

The aperture area is the penstock opening if the penstock is fully open. If the penstock is not fully open, the aperture area will be reduced.

H is the differential head at the centre of the opening - metres

The differential head is the difference between the upstream and down stream water levels.

g is the acceleration due to gravity - 9.81 m/s2

For example a penstock 1.5 metres wide by 2 metres deep with a 6 metre differential head at the centre of the door

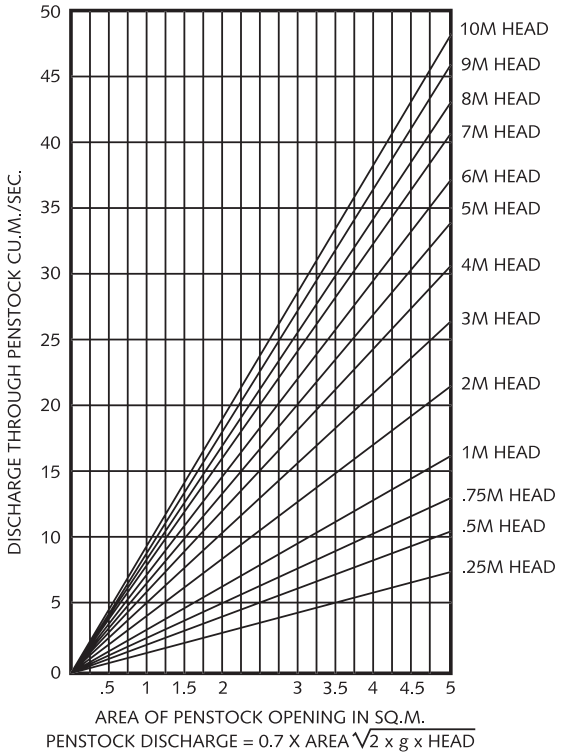

will discharge 22.8 cubic metres per second.
A graph of a range of discharges for different penstock apertures and differential heads is shown below.

Fig. 1 - Graph of Discharge against Head

3. Channel mounted penstocks

If a channel mounted penstock is fully open and the top of the penstock opening is above the water level in the channel, then the head loss results from disturbed flow in the rebates in the channel walls in which the penstock frame is mounted. These losses can generally be disregarded provided that the channel is not obstructed. Channel mounted penstocks usually have flush inverts.

When a penstock is in a channel and is partially closed, or the water level is above the top of the door opening, the calculations are complex. Reference should be made to a suitable publication on civil engineering hydraulics.

References

Open Channel Hydraulics
By V T Chow
McGraw-Hill Education

Open Channel Flow
By F M Henderson
Macmillan USA

Hydraulic Gates and Valves in Free Surface Flow and Submerged Outlets
By J Lewin
British Nuclear Energy Society

4. Weir Penstocks

Weir Penstocks behave in their discharge capability as a rectangular weir with partial end contractions, the extent of the end contraction being influenced by the civil engineering design in the locality of the weir.

An approximation to the discharge is given by

$$Q = 1.73\ WH1.5$$

Where

Q is the discharge rate - cubic metres per second

W is the width of the weir opening - metres

H is the head at the weir crest - metres

For example a weir 2 metres wide having a water depth of 200mm (0.2m) at the crest will discharge 0.31 cubic metres per second.

If the weir is used as a flow measuring or control device reference should be made to BS 3680-4A:1981 'Methods of measurement of liquid flow in open channels. Weirs and flumes. Methods using thin plate weirs' for channel design and relative water levels.

LEAKAGE

Ham Baker penstocks will be virtually drop-tight at their working pressure if installation has been carried out correctly.

Leakage rates are influenced by
- The head
- The seating direction, on or off
- The correct installation of the penstock
- Time

An on-seating penstock will leak less with increasing head.

An off-seating penstock will leak more with an increasing head.

Penstocks subject to an on-seating head seal more tightly than those subject to an off-seating head.

If the penstock is installed so that the frame is twisted, then the leakage rate will increase. Penstocks should be installed by experienced contractors and mounted on grout.

Over the course of time after closure of the penstock, the leakage rate will decrease as leakage paths are blocked by small pieces of debris in the water.

From the above it is clear that if leakage is required to be minimised, then the penstock should be configured so that it is on-seating.

Allowable Leakage Rates

Leakage rates are defined by the amount of water which leaks through a 1 metre length of seal in 1 minute.

BS 7775:1995 leakage rates apply to penstocks subject to a head of 6 metres or less and widths of 2 metres or less.

Penstocks with metal seals (Cast Iron Penstocks)
The allowable leakage rates listed are derived from BS 7775 'Specification for Penstocks' and AWWA C560 07 'AWWA Standard for Cast Iron Sluice Gates' as appropriate, shown in (gpm/ft)

On-seating head	Allowable leakage rate
Any head	1.25 litres/min/m (0.1gpm/ft)

Off-seating head	Allowable leakage rate
Up to 6 metres	2.5 litres/min/m (0.2gpm/ft)
Up to 9 metres	3.0 litres/min/m
Up to 12 metres	3.75 litres/min/m
Up to 15 metres	4.5 litres/min/m

Leakage rates for off-seating heads greater than 15 metres will be advised on request.

Penstocks with resilient rubber or plastic seals (Plastigate, Coplastix and Series 900 Penstocks).

There is currently no standard which applies to leakage rates for this type of penstock. The figures given below are Ham Baker's estimates.

On-seating head	Allowable leakage rate
Up to 5 metres	0.4 litres/min/m

Off-seating head	Allowable leakage rate
Up to 4 metres	0.4 litres/min/m

For example, a 1500mm wide by 2000mm deep cast iron penstock subject to an off-seating head of 9 metres would have a seal periphery of 2(1.5+2) = 7m and allowable leakage rate of 3.0 litres/min/m.

Therefore maximum allowable leakage rate = 7 x 3 = 21 litres/min.

On-site Leakage Test According to BS 7775

Before a site leakage test is undertaken the installer shall ensure that the penstock and its associated operating equipment have been correctly installed and fixed in position. Penstocks and associated operating equipment shall be installed strictly in accordance with

the manufacturer's recommendations. Final adjustments to the penstock shall be made and all moving parts shall be operated through one complete open and shut cycle to confirm proper operation before the leakage test commences.

Measurement of the liquid loss through the seals shall be carried out in such a way that any leaks from between the penstock frame and the structure shall not affect the result of the test. Tests shall be carried out over a period of 30 minutes.

FOUNDATION LOADS AND OPERATING FORCES

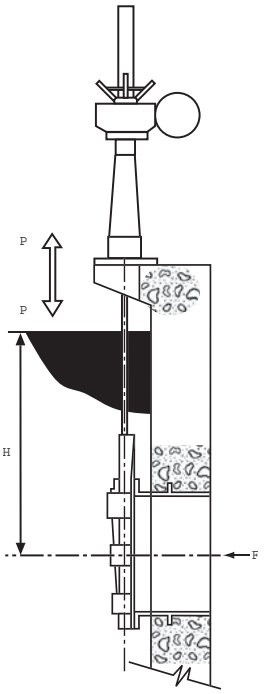

Precise foundation loads can be given by Ham Baker once a penstock has been specified. As a guide to the foundation loads to be expected, the following formulae can be used.

A penstock exerts two types of load on the civil engineering structure.

- Hydrostatic
- Operating

Note on heads.

Heads for penstocks are specified to the invert in BS 7775. These heads can be used conservatively for these calculations. More accurately, the head at the centre of the door should be used, this is the head at the invert less half the door depth.

1. Hydrostatic Force.

The hydrostatic load F is the force of the water against the penstock door, which will be transferred to the civil engineering structure by the penstock frame. This force acts horizontally.

The force F is given by (approximately)

$$F=10HA \quad \text{where F is in units of kN}$$

H is the maximum differential head at the centre of the door - metres. This should be the worst case which could occur.
A is the door area in square metres
For example a 1.5 metre square door with a head at the centre of the door of 6 metres will experience a hydrostatic force of

$$F= 10 \times 6 \times 1.52 \quad \text{that is } F=135 \text{ kN}$$

2. Operating Force

This is the force required to open and close the penstock door.

The civil engineering structure will experience this load where the penstock operating device is connected to the civil engineering structure and the penstock frame is connected to the civil engineering structure.

However the civil engineering structure will not experience this force if the penstock operating device is connected directly to the gate or the thrust reaction is taken at the top of the penstock frame.

The normal operating force of the penstock P can be taken as first approximation as

$$P= 0.5F \text{ kN} \qquad \text{where F is defined above}$$

This force acts vertically and can be up or down. For example the 1.5 metre square door with a head at the centre of the door of 6 metres considered above will have an operating force

$$P= 0.5 \times 135 = 67.5\text{kN}$$

In addition to the normal operating condition, a fault condition Pf

(e.g. actuator limit switch failure, or excessive force applied to the operating hand wheel) should be considered.

$$Pf = 2F \text{ kN} \qquad \text{where F is defined above}$$

The operator generates a torque, but the forces associated with this can be neglected for a first approximation.

The weight of the penstock is usually secondary to the operating force, except for low head applications.

SPINDLE DIAMETER

This is determined by many factors, included in these are

- The spindle should not fail due to yield or buckling during normal operation.
- The spindle should not fail due to yielding under the worst fault condition.
- The slenderness ratio of the spindle should be less than 250 or 200 if specified. The slenderness ratio is the length of a spindle section between guides divided by a quarter of the spindle diametre.
- The spindle should be self-sustaining (that is the weight of the penstock door should not back-drive the spindle through its power screw.

HANDWHEEL AND TEE KEY EFFORT

The efforts considered below are for normal operation of the penstock against the specified heads. For a manually operated penstock the handwheel effort is limited to 250 N (55 lbf) as a single pull on the rim unless otherwise specified.

A Tee Key is usually 500mm across the handle and has a push/pull effort limited to 125N thus generating a torque of 62.5 Nm.

MANUAL OPERATION OF ELECTRIC ACTUATORS

Where a handwheel is fitted to an electric actuator as an auxiliary method of operation, the handwheel effort is limited to 250N if this is reasonable. Although the handwheel effort can be limited to 250N in most cases, this increases the complexity of the penstock drive.

For larger penstocks (above about 2000mm square) manual operation of the actuator for a full stroke of the door is not practicable due to the excessive number of turns required. If the penstock must be operable in the case of electrical failure, provision can be made for an auxiliary power device such as a mobile internal combustion engine power pack.

INTERNATIONAL STANDARDS

BS EN ISO 9001 : 2000	Quality Management System Requirements
BS EN 1092-2 : 1997	Flanges and their joints; Circular flanges for pipes, valves, fittings and accessories; PN designated; Cast Iron Flanges
BS EN 1561 : 1997	Founding - Grey Cast Irons
BS EN 1982 : 1999	Copper and Copper Alloys : Ingots and Castings
BS 7775 : 1995	Specification for Penstocks
BS EN 10025 : 1993	Hot rolled products of non-alloy structured steels. Technical delivery conditions.
BS EN 12167 : 1998	Copper and Copper Alloys : Profiles and rectangular bar for general purposes.
AWWA C501-92	Standard for Cast Iron sluice gatesComposite Slide Gates

Special designs for non-standard sizes and high heads are available in
CAST IRON • COPLASTIX
STAINLESS STEEL

5

Operating Gear

SELECTION

- **Remote operation**
- **Thrust direct on frame**
- **Non-rising extension systems**

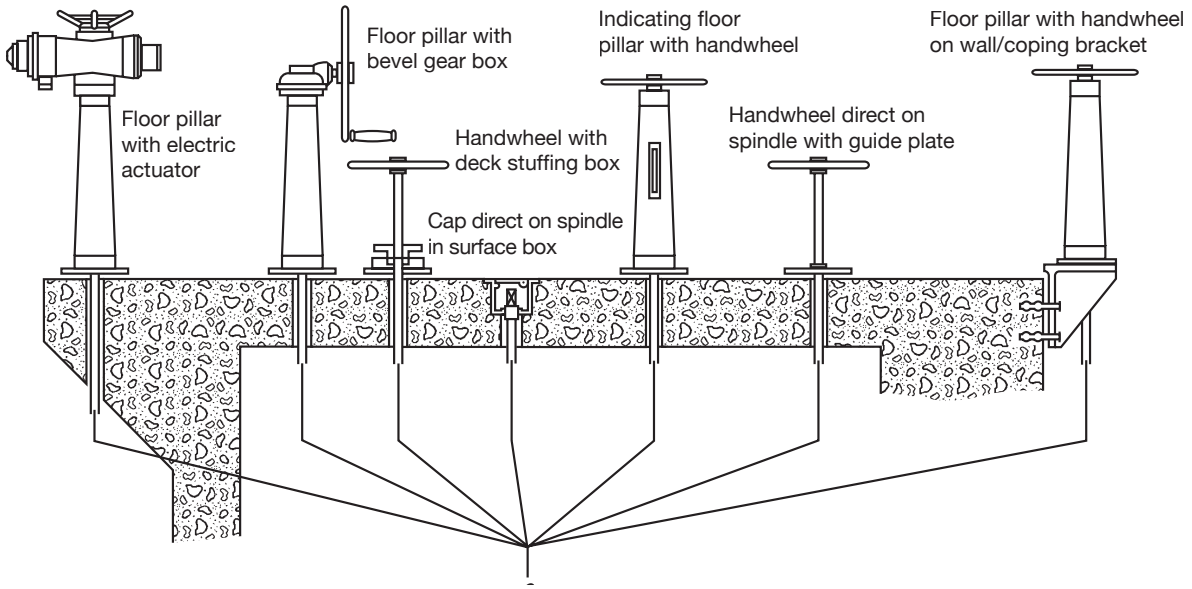

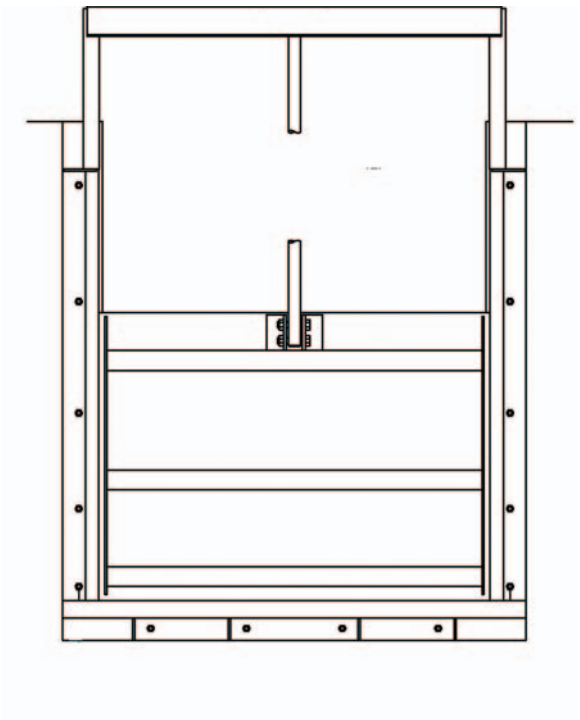

Non-rising spindles rotate through a non-ferrous nut in the penstock door. The screwed portion of the spindle at the bottom is probably immersed in the water/effluent etc.

Full Frame

Used where thrust reaction is accommodated at the top of the frame.

SELECTION

- **Remote operation**
- **Thrust remote from frame**
- **Rising extension systems**

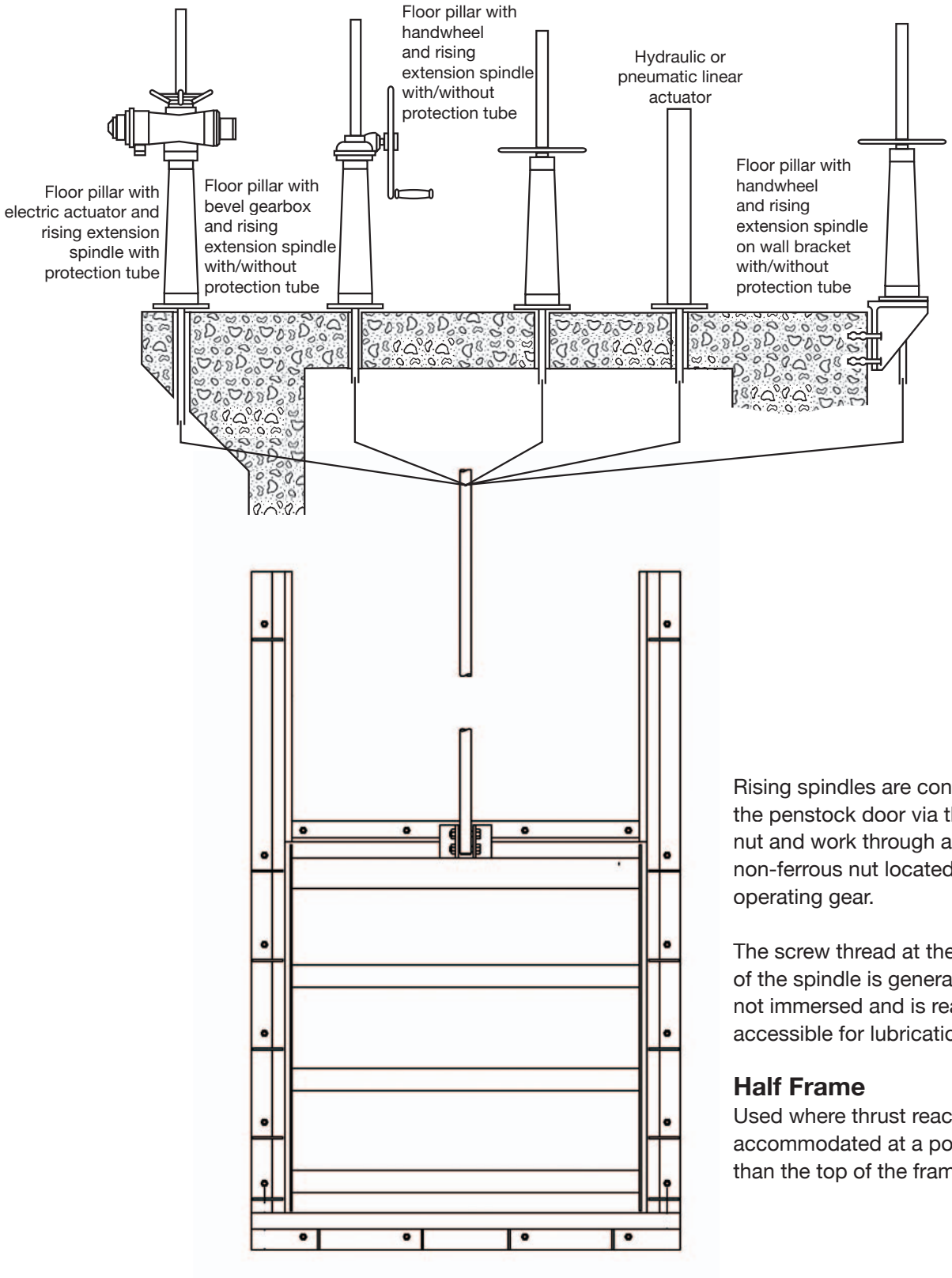

Rising spindles are connected to the penstock door via the door nut and work through a revolving non-ferrous nut located in the operating gear.

The screw thread at the top of the spindle is generally not immersed and is readily accessible for lubrication.

Half Frame

Used where thrust reaction is accommodated at a point other than the top of the frame.

HAMBAKER FlowControl

HAM BAKER **FLOW CONTROL** LTD
Garner Street
Etruria
Stoke-on-Trent
Staffordshire
ST4 7BH
Tel +44 (0) 1782 202300
Fax +44 (0) 1782 203639
www.hambaker.co.uk

HAMBAKER Installations

HAM BAKER **INSTALLATIONS**
Garner Street
Etruria
Stoke-on-Trent
Staffordshire
ST4 7BH
Tel +44 (0) 1782 202300
Fax +44 (0) 1782 203639
www.hambaker.co.uk

HAMBAKER MiddleEast

HAM BAKER **MIDDLE EAST FZCO**
Jebel Ali Free Zone
FZS1AE07
Dubai
United Arab Emirates
PO BOX 261378
Tel +971 (0) 488 60700
Fax +971 (0) 488 60701

HAMBAKER

HAM BAKER **INC**
Distribution Center
5000 Askins
Houston
Texas
77093
Tel +1 281.590.1500
Fax +1 281.590.1506
www.hambaker.us

Sales Office
5236 Roanoke Drive
Weldon Spring
Missouri
63304
USA
Tel +1 281.590.1500
Fax +1 281.590.1506
Cell (832) 683 2358
www.hambaker.us

BS EN ISO 9001:2000